EQUIP. TYPE R390A/URR EXP. NO.

~~COL 540 5351 002~~

NOTICE: WHEN GOVERNMENT DRAWINGS, SPECIFICATIONS, OR OTHER DATA ARE USED FOR ANY PURPOSE OTHER THAN IN CONNECTION WITH A DEFINITELY RELATED GOVERNMENT PROCUREMENT OPERATION, THE UNITED STATES GOVERNMENT THEREBY INCURS NO RESPONSIBILITY NOR ANY OBLIGATION WHATSOEVER, AND THE FACT THAT THE GOVERNMENT MAY HAVE FORMULATED, FURNISHED, OR IN ANY WAY SUPPLIED THE SAID DRAWINGS, SPECIFICATIONS, OR OTHER DATA IS NOT TO BE REGARDED BY IMPLICATION OR OTHERWISE AS IN ANY MANNER LICENSING THE HOLDER OR ANY OTHER PERSON OR CORPORATION, OR CONVEYING ANY RIGHTS OR PERMISSION TO MANUFACTURE, USE, OR SELL ANY PATENTED INVENTION THAT MAY IN ANY WAY BE RELATED THERETO.

THIS DOCUMENT HAS BEEN PURCHASED BY THE GOVERNMENT AND MAY BE REPRODUCED AND USED IN CONNECTION WITH ANY GOVERNMENT PROCUREMENT OR MAINTENANCE OPERATION.

*FOR INFORMATION ONLY. CONTRACTOR MAY AT HIS OPTION DEVIATE FROM THESE PROCESS DETAILS.

~~*SWE APPROVAL~~
~~SYM PR10042-2~~

REVISIONS

SYM	DESCRIPTION	DATE	APPROVAL
A,	ADDED APPL SM-C-343597, SMC-343598;	10C759	42428-PC-59-A1-S1 REV'D PME

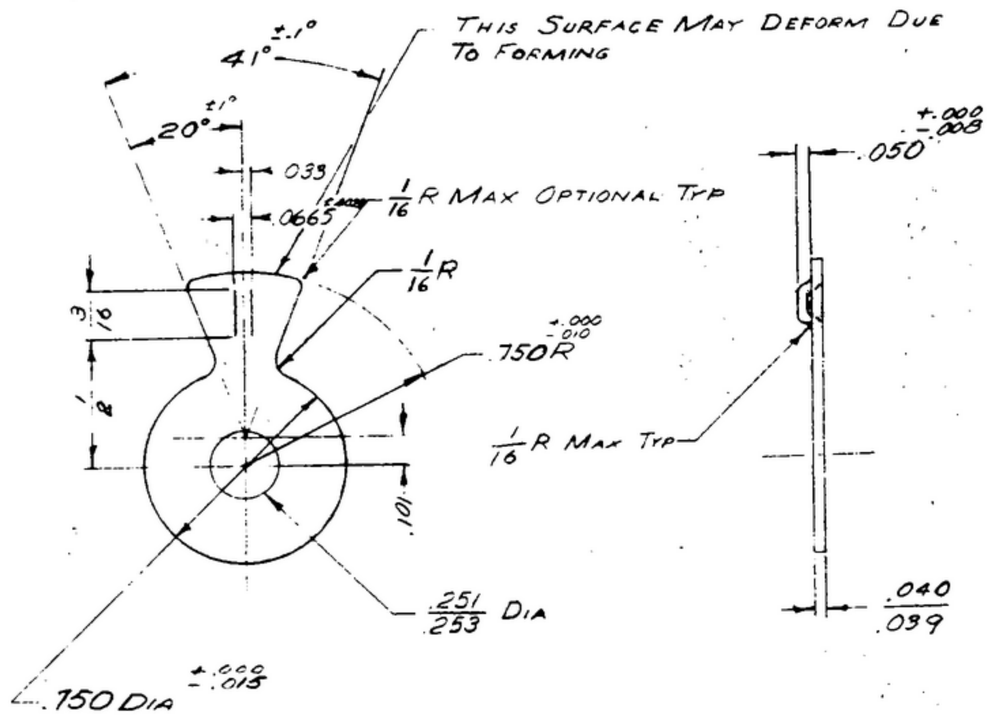

NOTES:
1. LANCED PROJECTION MUST SHOW NO FRACTURE AFTER FORMING.
2. REMOVE ALL BURRS.
3. PIECE MUST BE FLAT WITHIN .003 TOTAL INDICATOR READING

CRES, COMP. 302, PER SPEC. MIL-S-5059, COND. ANNEALED

FINISH: E300 PER SPEC. MIL-F-14072.
~~*COLLINS 580 0025 00.~~

(*SAME AS SWE 574957)

A,

~~COLLINS PART NO.~~	~~ITEM~~	~~REQD~~	~~PART NO.~~	~~DESCRIPTION~~	~~MATL~~	~~MATL SPEC~~

LIST OF MATERIAL ~~COLLINS PART NO 558 0218 002~~

		SM-C-343598	
		SM-C-343597	
~~558 0309 003~~	11	SM-C-248960	
~~558 0310 003~~	11	SM-C-248961	SC-DL-248775
~~COLLINS NO~~	~~QTY~~	NEXT ASSY	USED ON

APPLICATION

DRAWN R.B.B. CHECKED [illegible] APPROVED

UNLESS OTHERWISE SPECIFIED:
DECIMAL DIMENSIONS INCLUDING HOLE SIZES MAY VARY ± .005
FRACTIONAL DIMENSIONS INCLUDING HOLE SIZES MAY VARY ± 1/64
MACHINED ANGLES MAY VARY ± 1°
SHEARED ANGLES MAY VARY ± 2°
BROKEN ANGLES MAY VARY ± 1°
ECCENTRICITY BETWEEN ANY DIAMETERS ON THE SAME CENTERLINE SHALL NOT EXCEED .010 TOTAL INDICATOR READING
ALL DIMENSIONS ARE FINISH DIMENSIONS INCLUDING APPLIED FINISH AND ARE GIVEN IN INCHES

~~COLLINS RADIO CO.~~
~~CEDAR RAPIDS, IOWA~~
14214-PH-51-93

SIGNAL CORPS
REVIEWED PME
APPROVED HLY PME
DATE 6 DEC '55

WASHER - STOP

SCALE 2/1

DEPARTMENT OF THE ARMY
SIGNAL CORPS ENGINEERING LABORATORIES
FORT MONMOUTH NEW JERSEY

SM-B-248870

PD-794-074-2071-10 A4706 299507

WHEN REFERRING TO THIS DRAWING STATE DRAWING NO., APPLICABLE ISSUE SYMBOL IF ANY